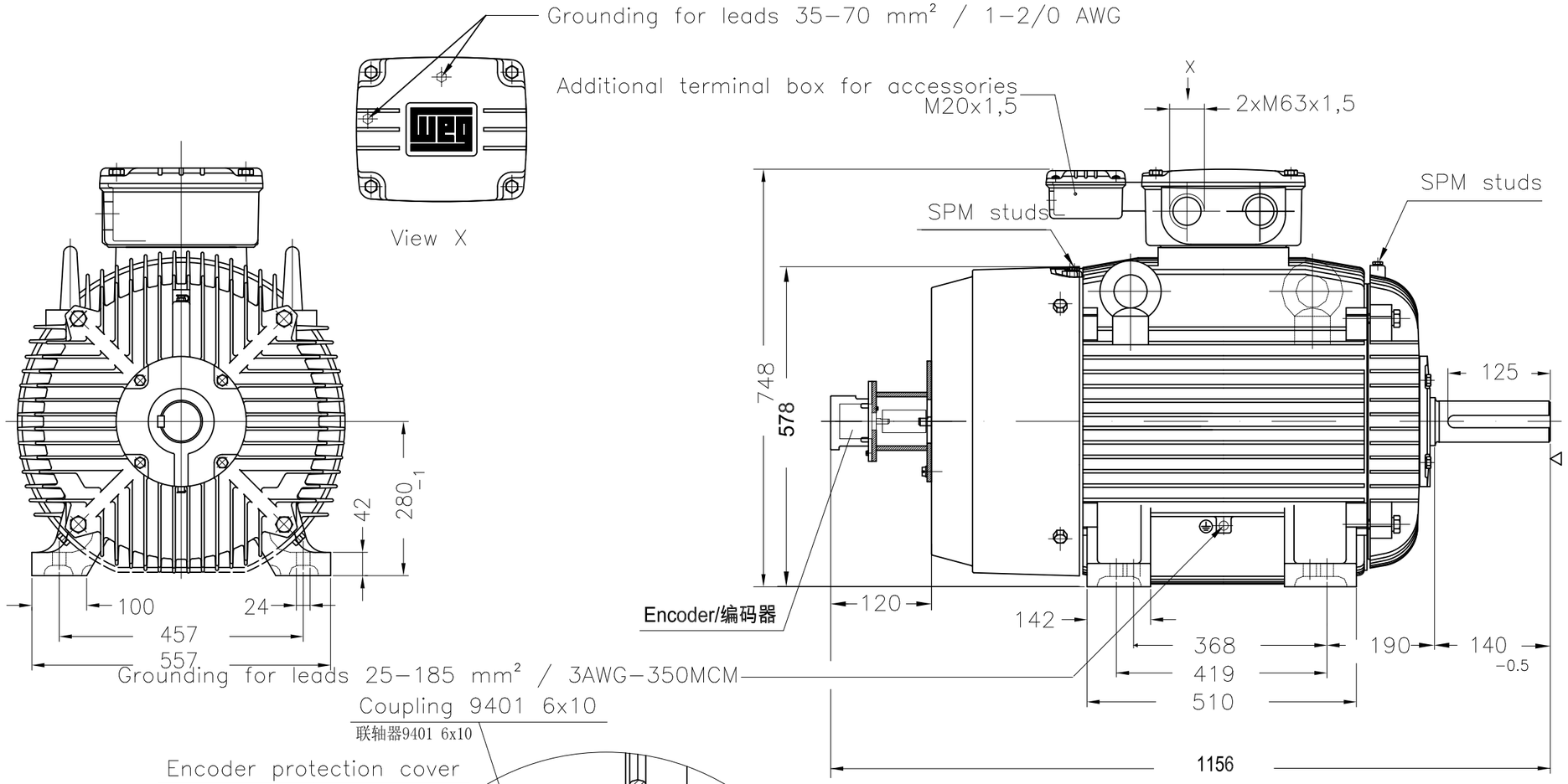

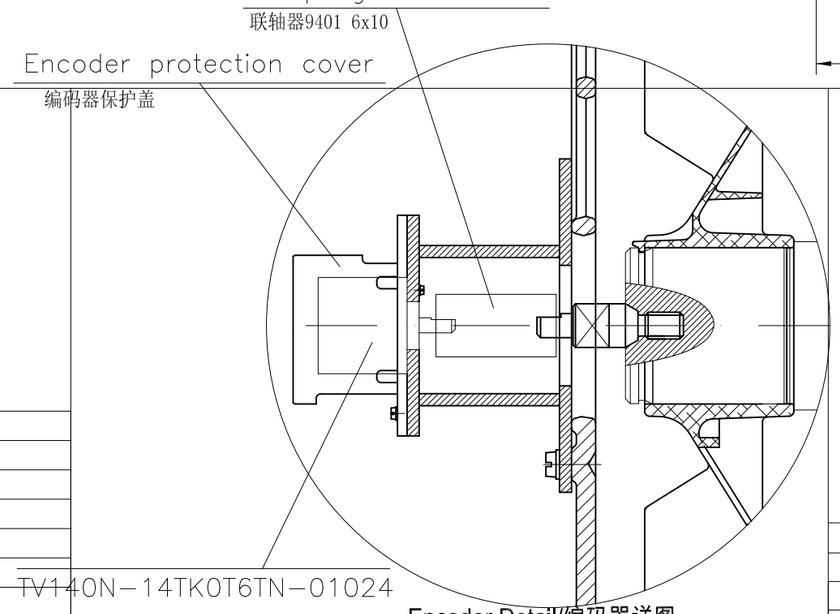

Encoder Detail/编码器详图

Motor with special crate package coverd with plastic 50028516/
电机使用塑料防尘膜50028516覆盖的特殊木箱包装

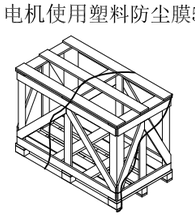

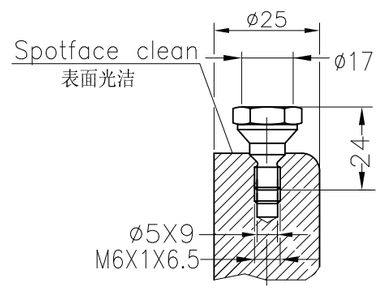

Vibration sensor studs detail/振动传感器螺栓详图

Rubber drain plug
Thermal protection to alarm - thermistors 130°C
SKF bearings
Permatex sealed endshields
Tropicalized internal painting
Space heaters 200 to 240 V
Sealing - W3 Seal Labyrinth
Cast iron fan cover
Thermal protection to switch off - thermistors 155°C
SPM studs
Color Munsell 10 YR 7/12
Painting plan 212P
Service factor 1.10
Mounting B3T

DE Shaft End

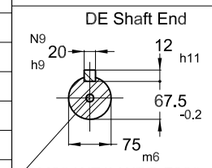

DM20 WEG WPR-7339 (DS DIN332)

45 kW 06 Poles 50 Hz | A

WEG SOUTH EAST ASIA SDN BHD

ECM	LOC	SUMMARY OF MODIFICATIONS	EXECUTED	CHECKED	RELEASED	DATE	VER
		422016155	HONGHAOJIE	WULIANG			00

EXECUTED	HONGHAOJIE	THREE PH. MOTOR GENERAL A. R. PLUS	1439840197
CHECKED	WULIANG	FRAME 280S/M IPW65 TEFC	WDD 00
RELEASED			
REL. DATE		WMO Jaragua do Sul Product Engineering	SHEET 1 / 1

Dimensions in mm

XME A3

WEG's property. Forbidden reproduction without previous authorization.