88442308 S 1 REV A FPD ENG LUTHER, NATASCHA (NLUTHER) AUG- 2011 14:21:20

REVISIONS						
REV.	DESCRIPTION	EDC No	DATE	REF. ZONE	REV'D	CHKD

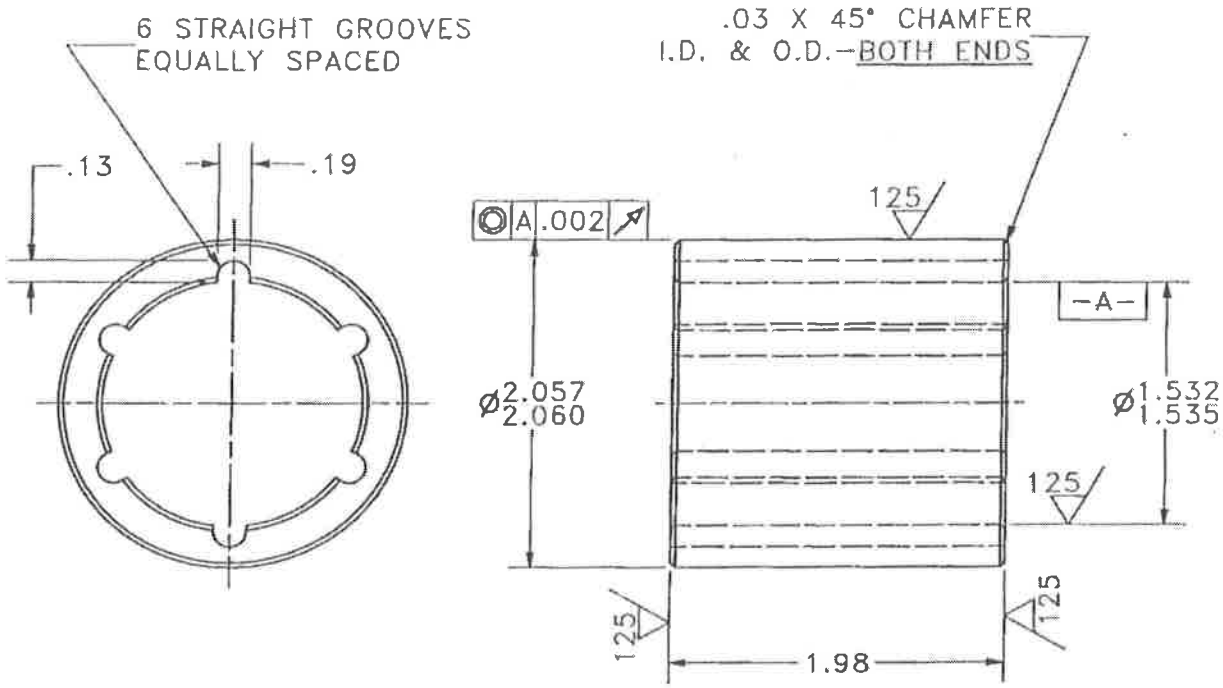

BEARING – SLEEVE – 1.53 I.D.
X 2.06 O.D. X 1.98 LENGTH
W/ 6 STRAIGHT GROOVES –
THORDON COMPOSITE/SXL

NOT TO SCALE FROM HARD COPY

PROPRIETARY NOTE

THIS MATERIAL IS THE PROPERTY OF FLOWSERVE INTERNATIONAL INC. AND IS FURNISHED ONLY FOR THE PURPOSE INDICATED. ANY AND ALL CONFIDENTIAL INFORMATION, PATENT AND OTHER RIGHTS, IN THE SUBJECT MATTER BEING REFERRED HEREUNDER ARE EXCLUSIVE RIGHTS TO WHICH FLOWSERVE INTERNATIONAL INC. HAS EXCLUSIVE OWNERSHIP. THIS MATERIAL, IN WHOLE OR IN PART, DOES NOT CONVEY ANY REPRESENTATION TO REPRODUCE THE MATERIAL, IN WHOLE OR IN PART, OR MANUFACTURE THE SUBJECT MATTER SHOWN THEREIN OR ON THE CONFIDENTIAL OR PROPRIETARY INFORMATION CONTAINED. SUCH REPRODUCTION OR MANUFACTURE ONLY BY SPECIFIC AUTHORIZATION IN WRITING SIGNED BY AN OFFICER OF FLOWSERVE INTERNATIONAL INC. OR BY AN OFFICER OF OTHER AUTHORIZED AGENT OF FLOWSERVE CORPORATION, DIVISION OF SUBSIDIARY.

PATTERN	MACHINE ALTER FROM
CASTING DWG.	MATERIAL THORDON
HYDRAULIC DWG.	WEIGHT

GEOMETRIC TOLERANCES UNLESS OTHERWISE SPECIFIED

FLATNESS	.002 PER FT.
STRAIGHTNESS	.002 PER FT.
ROUNDNESS	.010
PARALLELISM	.002 PER IN
PERPENDICULARITY	.002 PER IN
ANGULARITY	±1/2 DEGREE
RUNOUT	.010
TOTAL RUNOUT	.010
TRUE POSITION	Ø .060
CONCENTRICITY	Ø .010
SYMMETRY	SPECIFY
CYLINDRICITY	.010

UNLESS OTHERWISE SPECIFIED DIMENSIONS ARE IN INCHES TOLERANCES

DECIMAL PLACES	FOR'S	MISC. CLASS
ONE X.X	± .1	MINOR
TWO X.XX	± .02	MINOR
THREE X.XXX	± .005	BASIC MINOR
SPECIFIED	MAY BE ADD TOTAL	BASIC MAJOR
SPECIFIED	SINGLE TOTAL	CRITICAL
ANGLES	±0° – 30'	
OTHER ANGLES AND CHAMFERS	±2° – 30'	
THREADS	SIN-3A, 3B	
FILLETS & RADII	SIN MAX.	
BREAK CORNERS	45° X .03-.04	
FINISH CUT	± .01	
REMOVE BURRS & SHARP EDGES		

SOFTWARE	INVENTOR
ORDER NO.	VS00026
DRAWN BY MAHESH M.R	DATE 2009-11-03
CHECKED BY SSM	DATE 2009-11-04
PROD. FAM.	061
DWG. TYPE	MACH

FLOWSERVE Pump Division Tandytown Operation

DWG. TITLE

BEARING
SLEEVE
PART DRAWING

SIZE	DRAWING NO.	REV.
A4	88442308	A

SCALE TO SCALE | UNITS INCH | SHEET NO. 1 OF 1 n/p

3rd Angle Projection

THIS DOCUMENT AND ANY DESIGN, DEVELOPMENT, INVENTION OR COPYRIGHT WHICH IT MAY EMBODY OR REPRESENT ARE THE PROPERTY OF FLOWSERVE CORPORATION.
THIS DOCUMENT MAY NOT BE REPRODUCED, NOR ANY SUBJECT MATTER SHOWN HEREIN BE MANUFACTURED, WITHOUT WRITTEN PERMISSION FROM AN AUTHORIZED AGENT OF FLOWSERVE CORPORATION.